Technical sheet :

M-X 50-4

MANITOU
HANDLING YOUR WORLD

	Technical characteristics		Metric
1.1	Manufacturer		Manitou
1.2	Model Name		M-X 50-4
1.3	Power source		Diesel
1.4	Operator type		Seated
1.5	Max. capacity	Q	5000 kg
1.6	Load centre of gravity	c	600 mm
1.8	Load distance, centre of drive axle to fork	x	762 mm
1.9	Wheelbase	y	2120 mm
	Weight		
2.1	Service weight		7660 kg
2.2	Weight on front axle (laden) / rear axle (laden)		10800 kg / 1869 kg
2.3	Weight on front axle (Unladen) / rear axle (Unladen)		2570 kg / 5090 kg
	Wheels		
3.1	Tyres type		Pneumatic
3.3	Dimensions of rear wheels		340/80R18 XMCL 143A8
3.5	Number of front wheels / rear wheels		2 / 2
3.5.2	Number of drive wheels		4
3.6	Front wheel gauge	b10	1620 mm
	Dimensions		
4.1	Tilt of Mast Forward (deg) / Backward (deg)	α / β	6 / 12
4.7	Height of overhead guard (cabin)	h6	2495 mm
4.19	Overall length	l1	4945 mm
4.20	Length to face of forks	l2	3745 mm
4.21	Overall width	b1	2080 mm
4.22	Forks section / width / length	s / e / l	50 mm x 150 mm / 1200 mm
4.23	Fork carriage ISO 2328 (class/form) A/B		FEM4
4.24	Fork carriage width	b3	1670 mm
4.31	Ground clearance below mast	m1	265 mm
4.32	Ground clearance at centre of wheelbase	m2	375 mm
4.35	Turning radius	Wa	4155 mm
4.36	Internal turning radius (over tyres)	b13	1120 mm
	Performances		
5.1	Travel speed (laden / unladen)		24 km/h / 23.4 km/h
5.2	Lifting speed (laden / unladen)		0.4 m/s / 0.5 m/s
5.3	Lowering speed (laden / unladen)		0.4 m/s / 0.4 m/s
5.5	Drawbar pull (Laden / Unladen)		10360 daN / 6205 daN
5.10	Service brake		Hydraulic
	Engine		
7.1	Engine brand / model		Perkins / 1104D-44T NL38894
7.3	Rated speed		2360 rpm
	Miscellaneous		
8.1	Type of drive control		Hydraulic

Dimensional drawing

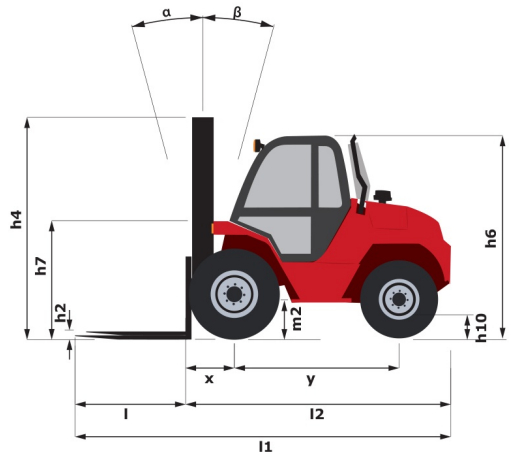

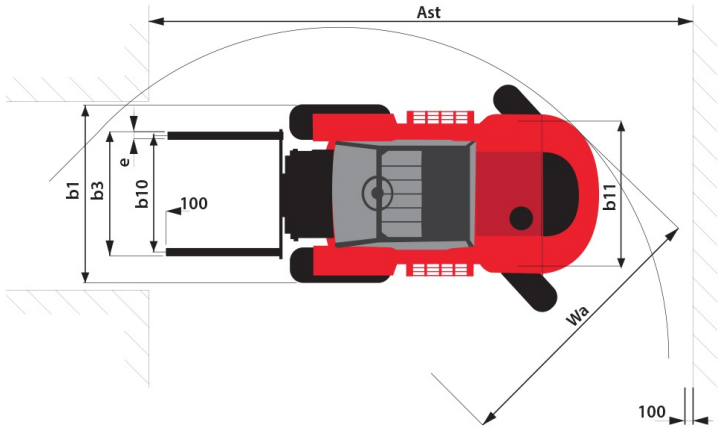

Characteristics of masts and residual capacities

Full Visibility Duplex		FVD 30	FVD 33	FVD 35	FVD 37	FVD 40	FVD 45	FVD 50	FVD 55
h1 - Height mast lowered *	mm	2560	2710	2810	2910	3060	3305	2560	3755000
h2 - Free lift	mm	0	0	0	0	0	0	0	0
h3 - Lifting Height	mm	3000	3300	3500	3700	4000	4500	5000	5500000
h4 - Height mast extended *	mm	4115	4415	4615	4815	5115	5615	6115	6550000
α / β - Mast inclination (front / rear)	°	15 / 15	15 / 15	15 / 15	15 / 15	15 / 15	15 / 15	15 / 15	

Free Lift Triplex		FLT 37	FLT 40	FLT 43	FLT 45	FLT 47	FLT 50	FLT 55	FLT 60
h1 - Height mast lowered *	mm	2310	2410	2510	2585	2645	2760	2910	3085
h2 - Free lift	mm	1265	1365	1465	1540	1600	1715	1865	2040
h3 - Lifting Height	mm	3700	4000	4300	4500	4700	5000	5500	6000
h4 - Height mast extended *	mm	4805	5105	5405	5605	5806	6105	6605	7105
α / β - Mast inclination (front / rear)	°	15 / 15	15 / 15	15 / 15	15 / 15	15 / 15	15 / 15	15 / 15	15 / 15

Siège Social
430 rue de l'Aubinière - 44150 Ancenis Cedex - France
Tel: +33(0)2 40 09 10 11 - Fax: +33 (0)2 40 09 10 97
www.manitou.com

This brochure describes versions and configuration options for Manitou products which may be fitted with different equipment. The equipment described in this brochure may be standard, optional or not available depending on version. Manitou reserves the right to change the specifications shown and described at any time and without prior warning. The manufacturer is not liable for the specifications given. For more information, contact your Manitou dealer. Non-contractual document. Product descriptions may differ from actual products. List of specifications is not comprehensive. The logos and visual identity of the company are the property of Manitou and may not be used without authorisation. All rights reserved. The photos and diagrams contained in thisbrochure are provided for information only.
MANITOU BF SA - Limited company with board of directors - Share capital: 39,668,399 euros - 857 802 508 RCS Nantes